Cambridge International AS & A Level

Cambridge International Examinations
Cambridge International Advanced Subsidiary and Advanced Level

CANDIDATE NAME									
CENTRE NUMBER						CANDIDATE NUMBER			

5802267223

PHYSICS **9702/22**

Paper 2 AS Structured Questions **October/November 2015**

1 hour

Candidates answer on the Question Paper.

No Additional Materials are required.

READ THESE INSTRUCTIONS FIRST

Write your Centre number, candidate number and name on all the work you hand in.
Write in dark blue or black pen.
You may use an HB pencil for any diagrams or graphs.
Do not use staples, paper clips, glue or correction fluid.
DO **NOT** WRITE IN ANY BARCODES.

Answer **all** questions.

Electronic calculators may be used.
You may lose marks if you do not show your working or if you do not use appropriate units.

At the end of the examination, fasten all your work securely together.
The number of marks is given in brackets [ ] at the end of each question or part question.

This document consists of **16** printed pages.

© UCLES 2015

CAMBRIDGE International Examinations

Data

speed of light in free space, $c = 3.00 \times 10^{8}\ \text{m s}^{-1}$

permeability of free space, $\mu_0 = 4\pi \times 10^{-7}\ \text{H m}^{-1}$

permittivity of free space, $\varepsilon_0 = 8.85 \times 10^{-12}\ \text{F m}^{-1}$

$$\left(\frac{1}{4\pi\varepsilon_0} = 8.99 \times 10^{9}\ \text{m F}^{-1}\right)$$

elementary charge, $e = 1.60 \times 10^{-19}\ \text{C}$

the Planck constant, $h = 6.63 \times 10^{-34}\ \text{J s}$

unified atomic mass constant, $u = 1.66 \times 10^{-27}\ \text{kg}$

rest mass of electron, $m_e = 9.11 \times 10^{-31}\ \text{kg}$

rest mass of proton, $m_p = 1.67 \times 10^{-27}\ \text{kg}$

molar gas constant, $R = 8.31\ \text{J K}^{-1}\ \text{mol}^{-1}$

the Avogadro constant, $N_A = 6.02 \times 10^{23}\ \text{mol}^{-1}$

the Boltzmann constant, $k = 1.38 \times 10^{-23}\ \text{J K}^{-1}$

gravitational constant, $G = 6.67 \times 10^{-11}\ \text{N m}^2\ \text{kg}^{-2}$

acceleration of free fall, $g = 9.81\ \text{m s}^{-2}$

© UCLES 2015

Formulae

uniformly accelerated motion, $s = ut + \frac{1}{2}at^2$
$v^2 = u^2 + 2as$

work done on/by a gas, $W = p\Delta V$

gravitational potential, $\phi = -\frac{Gm}{r}$

hydrostatic pressure, $p = \rho gh$

pressure of an ideal gas, $p = \frac{1}{3}\frac{Nm}{V}\langle c^2 \rangle$

simple harmonic motion, $a = -\omega^2 x$

velocity of particle in s.h.m., $v = v_0 \cos \omega t$
$v = \pm \omega\sqrt{(x_0^2 - x^2)}$

electric potential, $V = \frac{Q}{4\pi\varepsilon_0 r}$

capacitors in series, $1/C = 1/C_1 + 1/C_2 + \ldots$

capacitors in parallel, $C = C_1 + C_2 + \ldots$

energy of charged capacitor, $W = \frac{1}{2}QV$

resistors in series, $R = R_1 + R_2 + \ldots$

resistors in parallel, $1/R = 1/R_1 + 1/R_2 + \ldots$

alternating current/voltage, $x = x_0 \sin \omega t$

radioactive decay, $x = x_0 \exp(-\lambda t)$

decay constant, $\lambda = \frac{0.693}{t_{\frac{1}{2}}}$

© UCLES 2015

[Turn over

Answer **all** the questions in the spaces provided.

1 **(a)** The frequency of an X-ray wave is 4.6×10^{20} Hz.

Calculate the wavelength in pm.

wavelength = ... pm [3]

(b) The distance from Earth to a star is 8.5×10^{16} m. Calculate the time for light to travel from the star to Earth in Gs.

time = ... Gs [2]

(c) The following list contains scalar and vector quantities.

Underline **all** the scalar quantities.

acceleration force mass power temperature weight [1]

(d) A boat is travelling in a flowing river. Fig. 1.1 shows the velocity vectors for the boat and the river water.



Fig. 1.1

The velocity of the boat in still water is $14.0\,m\,s^{-1}$ to the east. The velocity of the water is $8.0\,m\,s^{-1}$ from 60° north of east.

© UCLES 2015

(i) On Fig. 1.1, draw an arrow to show the direction of the resultant velocity of the boat. [1]

(ii) Determine the magnitude of the resultant velocity of the boat.

magnitude of velocity = ... $m\,s^{-1}$ [2]

2 Fig. 2.1 shows an object M on a slope.

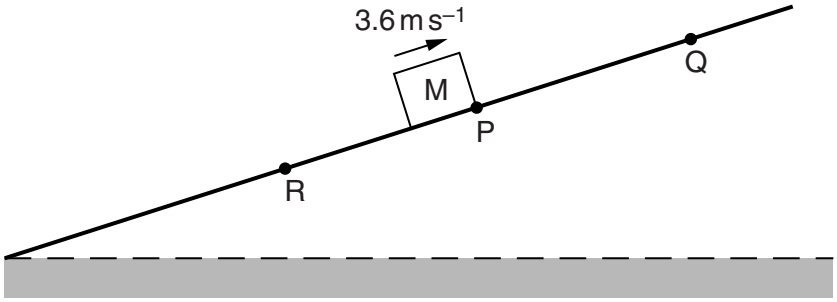

Fig. 2.1

M moves up the slope, comes to rest at point Q and then moves back down the slope to point R.
M has a constant acceleration of $3.0\,m\,s^{-2}$ down the slope at all times.
At time $t = 0$, M is at point P and has a velocity of $3.6\,m\,s^{-1}$ up the slope.
The total distance from P to Q and then to R is 6.0 m.

(a) Calculate, for the motion of M from P to Q,

(i) the time taken,

time = ... s [2]

(ii) the distance travelled.

distance = ... m [1]

(b) Show that the speed of M at R is $4.8\,m\,s^{-1}$.

[2]

(c) On Fig. 2.2, draw the variation with time t of the velocity v of M for the motion P to Q to R.

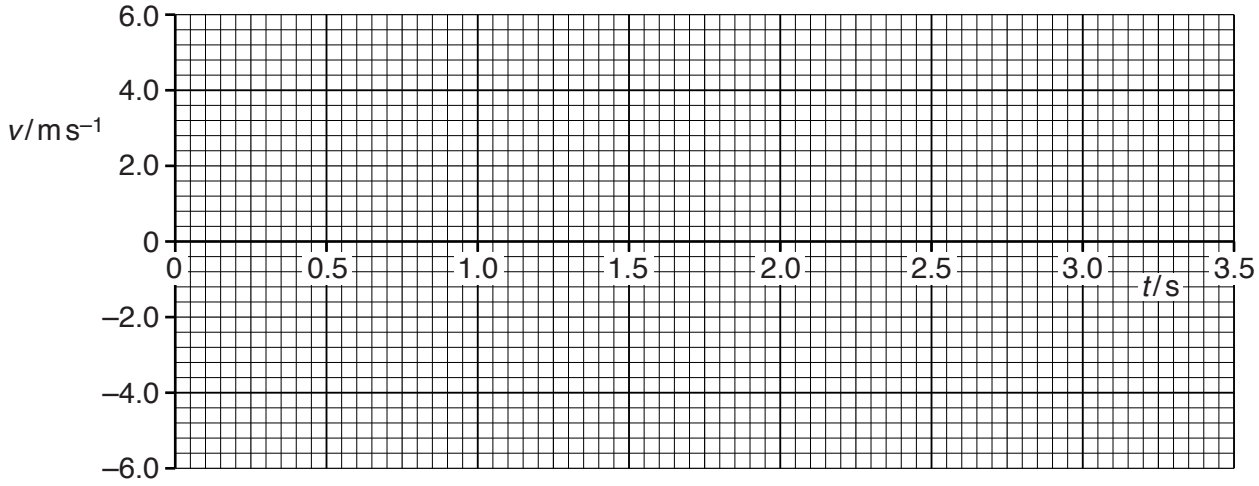

Fig. 2.2

[3]

(d) The mass of M is 450 g.

Calculate the difference in the kinetic energy of M at P and at R.

difference in kinetic energy = ... J [2]

3 A trolley T moves at speed $1.2\,m\,s^{-1}$ along a horizontal frictionless surface. The trolley collides with a stationary block on the end of a fixed spring, as shown in Fig. 3.1.

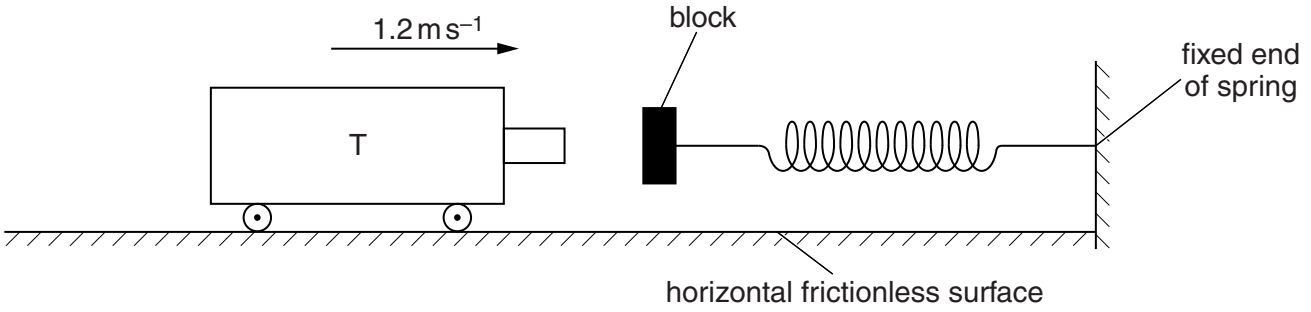

Fig. 3.1

The mass of T is 250 g. T compresses the spring by 5.4 cm as it comes to rest.
The relationship between the force F applied to the block and the compression x of the spring is shown in Fig. 3.2.

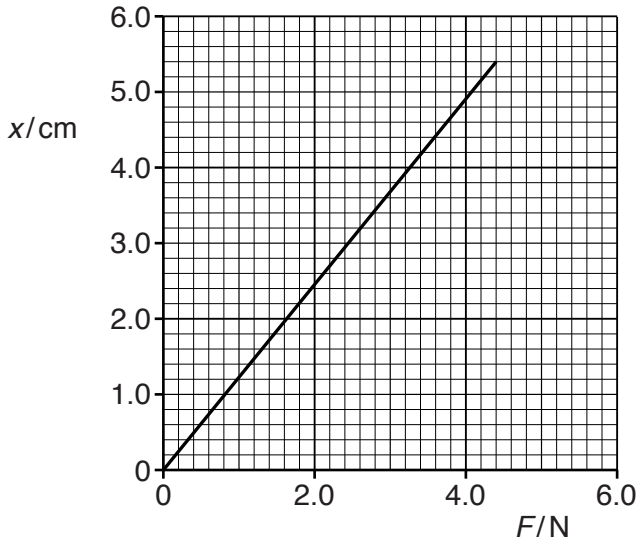

Fig. 3.2

(a) Use Fig. 3.2 to determine

(i) the spring constant of the spring,

spring constant = ... $N\,m^{-1}$ [2]

(ii) the work done by T compressing the spring by 5.4 cm.

work done = ... J [2]

(b) The spring then expands and causes T to move in a direction opposite to its initial direction. At the time that T loses contact with the block, it is moving at a speed of 0.75 m s^{-1}.

From the time that T is in contact with the block,

(i) describe the energy changes,

.....

.....

.....

.....[2]

(ii) determine the change in momentum of T.

change in momentum = ... N s [2]

4 **(a)** Define *moment of a force*.

.....

.....[1]

(b) An arrangement for lifting heavy loads is shown in Fig. 4.1.

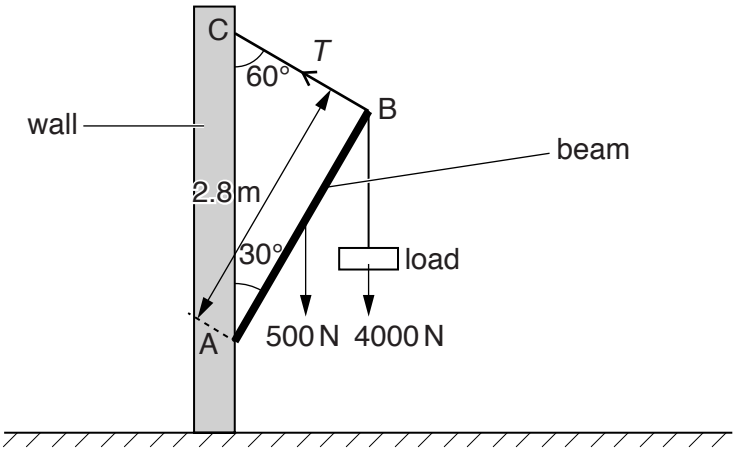

Fig. 4.1

A uniform metal beam AB is pivoted on a vertical wall at A. The beam is supported by a wire joining end B to the wall at C. The beam makes an angle of 30° with the wall and the wire makes an angle of 60° with the wall.

The beam has length 2.8 m and weight of 500 N. A load of 4000 N is supported from B. The tension in the wire is *T.* The beam is in equilibrium.

(i) By taking moments about A, show that T is 2.1 kN.

[2]

(ii) Calculate the vertical component T_v of the tension *T.*

T_v = ... N [1]

(iii) State and explain why T_v does not equal the sum of the load and the weight of the beam although the beam is in equilibrium.

.....

.....[2]

© UCLES 2015

5 A 240 V power supply S with negligible internal resistance is connected to four resistors, as shown in Fig. 5.1.

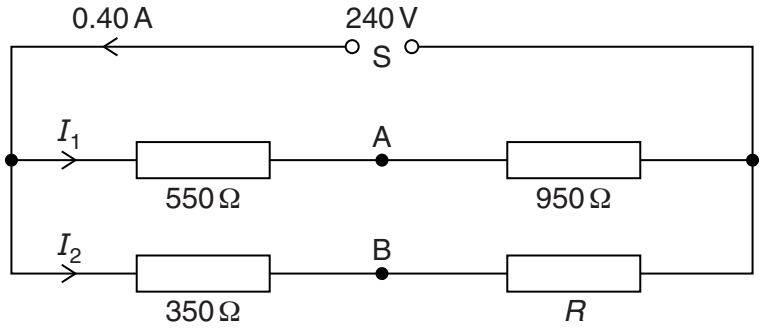

Fig. 5.1

Two resistors of resistance 550 Ω and 950 Ω are connected in series across S. Two resistors of resistance 350 Ω and *R* are also connected in series across S.

The current supplied by S is 0.40 A.
Currents I_1 and I_2 in the circuit are shown in Fig. 5.1.

(a) Calculate

(i) current I_1,

I_1 = ... A [2]

(ii) resistance *R*,

R = ...Ω [2]

(iii) the ratio

$$\frac{\text{power transformed in resistor of resistance } 350\,\Omega}{\text{power transformed in resistor of resistance } 550\,\Omega}.$$

ratio = ... [2]

(b) Two points are labelled A and B, as shown in Fig. 5.1.

(i) Calculate the potential difference V_{AB} between A and B.

V_{AB} = ... V [2]

(ii) The resistance R is increased.

State and explain the effect on V_{AB}.

.....

.....

.....[1]

6 A 12V battery with internal resistance 0.50Ω is connected to two identical filament lamps L_1 and L_2 as shown in Fig. 6.1.

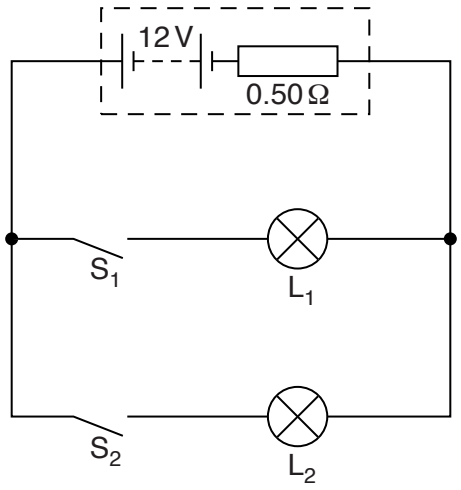

Fig. 6.1

The lamps are connected to the battery via switches S_1 and S_2. The power rating of each lamp is 48W for a potential difference of 12V.

(a) S_1 is closed and S_2 open.

State and explain whether the power transformed in L_1 is 48W.

.....

.....

.....[2]

(b) S_2 is now also closed.

(i) State and explain the effect on the current in L_1.

.....

.....

.....[1]

(ii) State and explain the effect on the resistance of L_1.

.....

.....

.....[1]

7 An arrangement that is used to demonstrate interference with waves on the surface of water is shown in Fig. 7.1.

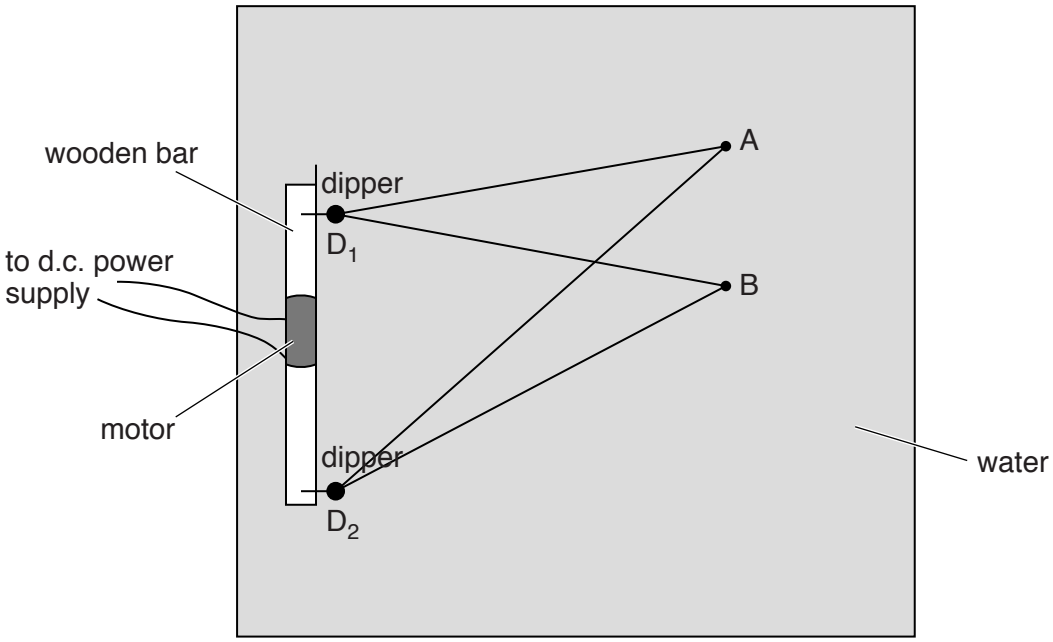

Fig. 7.1 (view from above)

(a) Two dippers D_1 and D_2 are connected to a motor and a d.c. power supply. Initially only D_1 vibrates on the water surface to produce waves.
The variation with distance x from D_1 of the displacement y of the water at one instant of time is shown in Fig. 7.2.

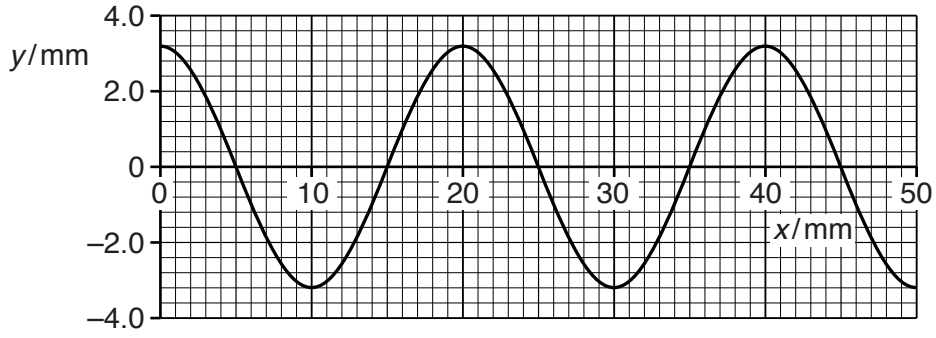

Fig. 7.2

Using Fig. 7.2, determine

(i) the amplitude of the wave,

amplitude = ... mm [1]

(ii) the wavelength of the wave.

wavelength = ... mm [1]

© UCLES 2015

(b) The two dippers D_1 and D_2 are made to vibrate and waves are produced by both dippers on the water surface.

(i) State and explain whether these waves are stationary or progressive.

.....

.....[1]

(ii) Explain why D_1 and D_2 are connected to the same motor.

.....

.....[1]

(c) The points A and B on Fig. 7.1 are at the distances from D_1 and D_2 shown in Fig. 7.3.

D_1A	D_2A	D_1B	D_2B
5.0 cm	7.0 cm	5.0 cm	6.0 cm

Fig. 7.3

State and explain the variation with time of the displacement of the water on the surface at

(i) A,

.....

.....

.....

.....[2]

(ii) B.

.....

.....

.....[1]

© UCLES 2015

[Turn over

8 **(a)** The results of the α-particle scattering experiment gave evidence for the structure of the atom.

State two results and the associated conclusions.

result 1: .....

.....

conclusion 1: .....

.....

result 2: .....

.....

conclusion 2: .....

.....

[4]

(b) In a model of a copper atom of the isotope $^{63}_{29}Cu$, the atom and its nucleus are assumed to be spherical.

The diameter of the nucleus is 2.8×10^{-14} m. The diameter of the atom is 2.3×10^{-10} m.

Calculate the ratio

$$\frac{\text{density of the nucleus}}{\text{density of the atom}}.$$

ratio = ...[3]

Permission to reproduce items where third-party owned material protected by copyright is included has been sought and cleared where possible. Every reasonable effort has been made by the publisher (UCLES) to trace copyright holders, but if any items requiring clearance have unwittingly been included, the publisher will be pleased to make amends at the earliest possible opportunity.

To avoid the issue of disclosure of answer-related information to candidates, all copyright acknowledgements are reproduced online in the Cambridge International Examinations Copyright Acknowledgements Booklet. This is produced for each series of examinations and is freely available to download at www.cie.org.uk after the live examination series.

Cambridge International Examinations is part of the Cambridge Assessment Group. Cambridge Assessment is the brand name of University of Cambridge Local Examinations Syndicate (UCLES), which is itself a department of the University of Cambridge.